monitor LiFTS

BRISBANE MELBOURNE PERTH SYDNEY TAMWORTH

monitor.net.au • 1800 025 024

WINLET 1000 CRAWLER

GLASS HANDLING LIFT

WINLET 1000 CRAWLER

The Winlet 1000 Crawler, a bi-leveling machine built to tackle rough terrain with ease. This superior machine takes glazing to a whole new level! Allowing glaziers to transport their heavy glass panels up & down 15° slopes, indoors or outdoors and install them safely, easily and more efficiently.

The Winlet 1000 Crawler machine is designed to start where all other glass lifts must give up. Weighing in at 2,980kg.

The bi-leveling system on the Winlet 1000 Crawler means that this machine is able to level up 15° longitudinally & 14° latitudinally at the same time, allowing a glazier to work on steep slopes with maximum control over the installation of large glass panels. Like the Winlet 1000, the Winlet 1000 Crawler has a 3. stage telescopic boom allowing the machine to reach a maximum of 5.1m of vertical reach.

GROUND PRESSURE

Winlet Crawler Bi-Leveling can operate on all different type of terrain, on stairs etc., ensuring the maximum maneuverability and precision even in the narrowest spaces, with the minimum ground pressure – and without any kind of outriggers needed at any time.

DYNAMIC LEVELLING

The levelling of the manipulator is completely automatic when using the Dynamic Levelling System even on slopes or uneven surfaces. Winlet Crawler Bi-Leveling will automatically adjust both on longitudinal slopes until 15° (27%) and lateral slopes until 14° (25%) at the same time, always ensuring a safe and effective transportation or installation.

1000KG
LIFTING CAPACITY

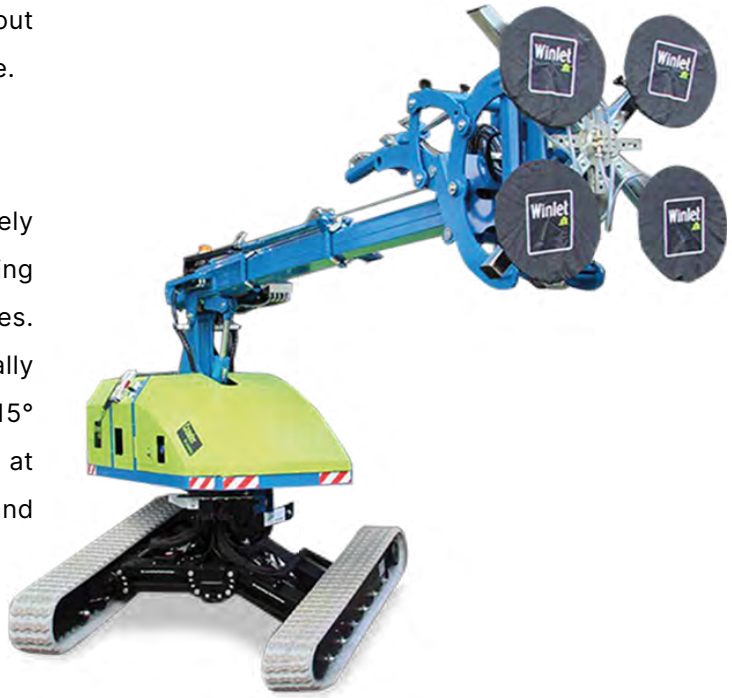

Winlet
1000
Crawler

TECHNICAL SPECIFICATIONS

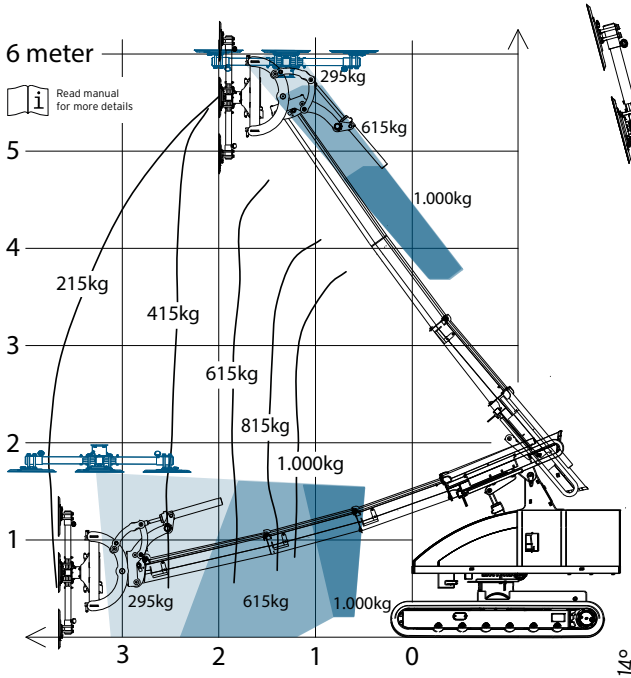

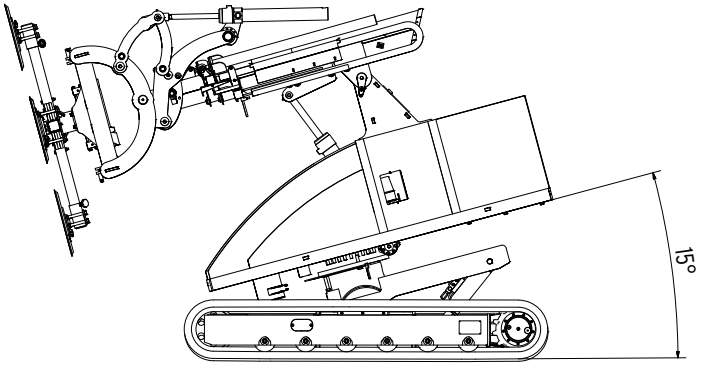

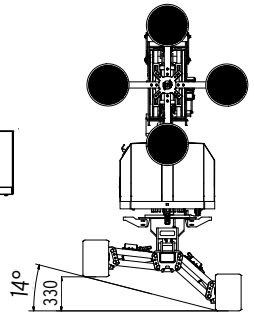

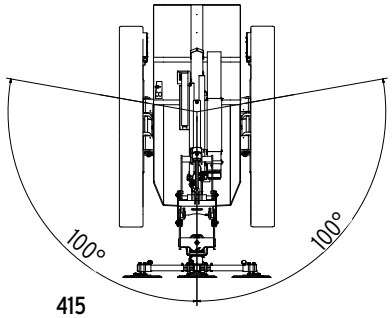

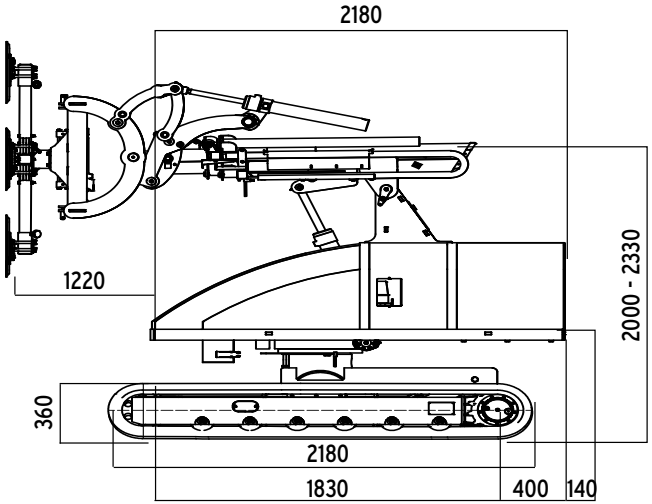

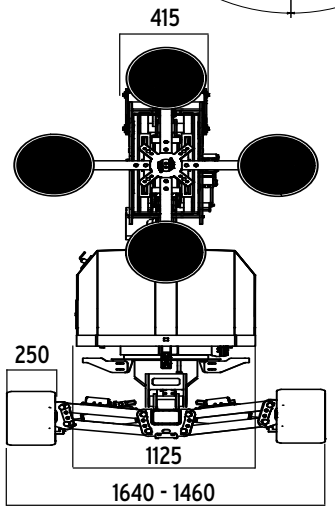

Max. Lifting Capacity	**1000 kg**
Max. Vertical Lifting Height (Raised Carrier)	5.48 m
Max. Vertical Lifting Height (Lowered Carrier)	5.28 m
Max. Horizontal Lifting Height (Raised Carrier)	6.05 m
Max. Horizontal Lifting Height (Lowered Carrier)	5.85 m
Max. Vertical Lifting Height (Suction cups down, lowered carrier)	1.54 m
Total Weight	**3380 kg**
External Length	3530 mm
External Width	1460-1640 mm
External Height	2120 mm
Hydraulic Side Shift	75 mm
Fine Lift on Arm	200 mm
Tilt Function	Back: 43° Forth: 180°
Hydraulic Rotation	360°
Suction Cups	4 × 410 mm
Batteries	48V, 420 aH
Max. Speed	0-2.2 kpH

(All specs E&OE and subject to change)

Crawler

GET IN TOUCH

monitor.net.au

sales@monitor.net.au

1800 025 024 (free call)

OUR LOCATIONS

TAMWORTH
143 Gunnedah Road, Tamworth NSW 2340

SYDNEY
9 Brumby Street, Seven Hills NSW 2147

MELBOURNE
75 Willandra Drive, Epping VIC 3076

BRISBANE

CABOOLTURE
67 Bradman St. Acacia Ridge QLD 4110

PERTH

NEW ZEALAND
Youngman Richardson & Co. Ltd.
Branches: Auckland, Wellington, Christchurch